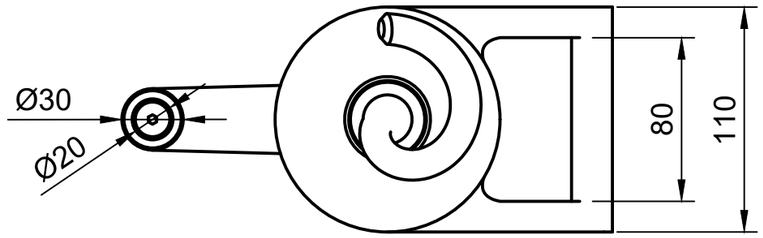

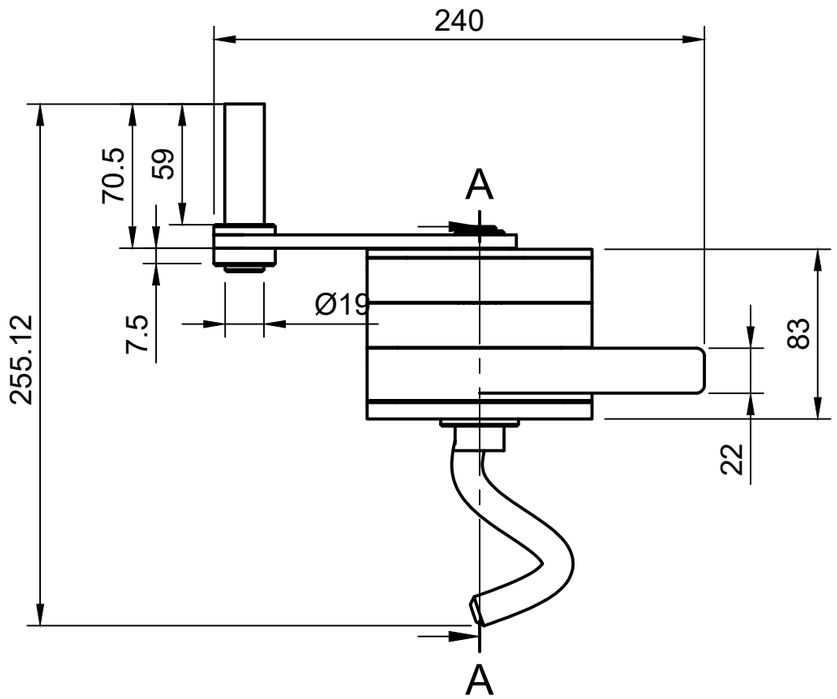

A-A (1:3)

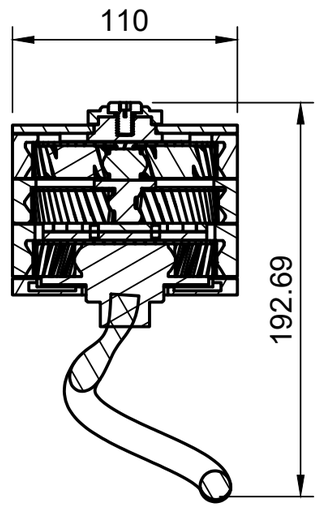

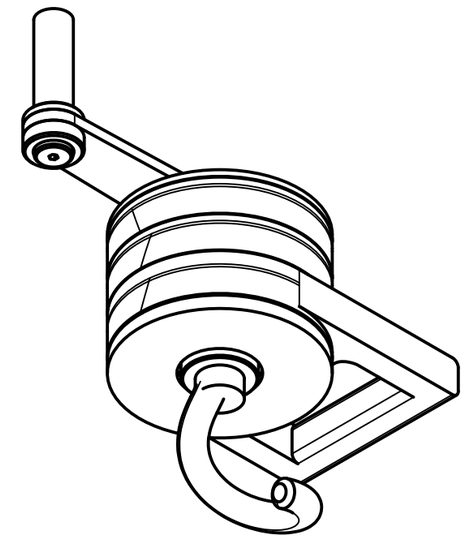

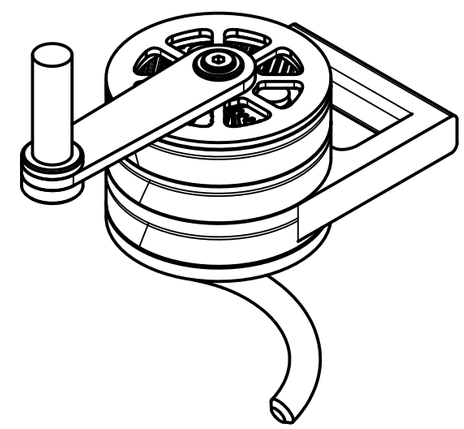

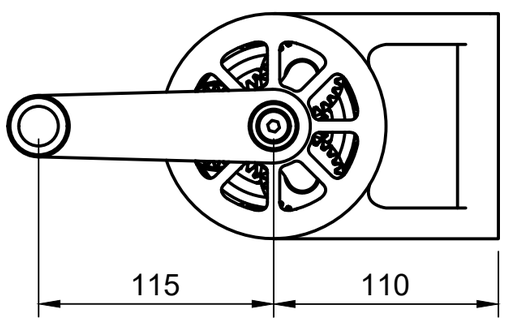

データ公開先：https://github.com/ktymRyich/PlanetaryDoughMixer?tab=readme-ov-file

Created by 形山 竜一	Material PETG		
Title PlanetaryDoughMixer	Ver. 1	Date 2025/7/29	Sheet 1/2

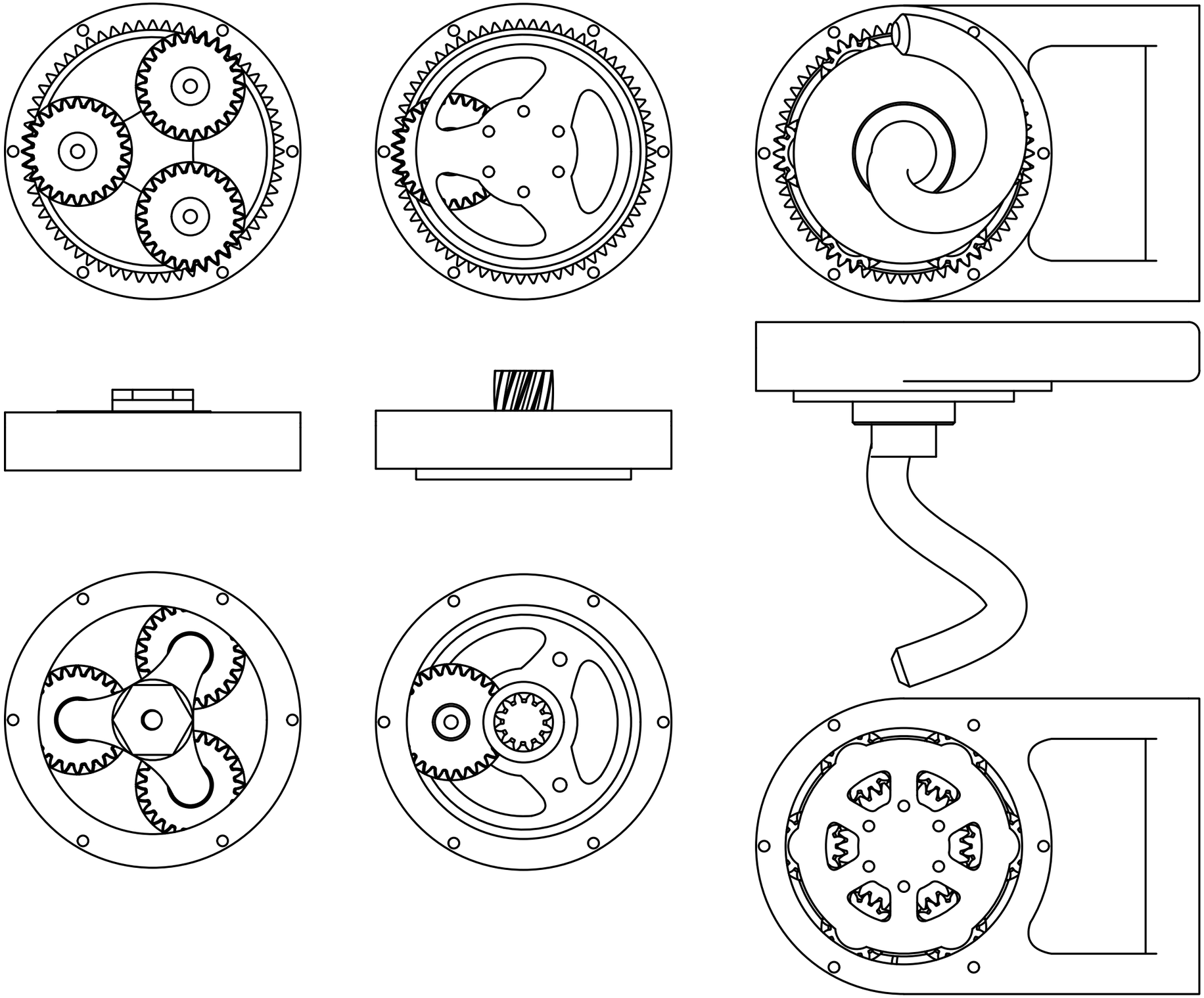

データ公開先：https://github.com/ktymRyich/PlanetaryDoughMixer?tab=readme-ov-file

Created by 形山 竜一	Material PETG		
Title PlanetaryDoughMixer	Ver. 1	Date 2025/7/29	Sheet 2/2